# CO2035

# 3. Z - Transform

# Contents


- The z–Transform
  - The Direct z–Transform
  - The Inverse z–Transform
- Properties of the z–Transform
- Rational z–Transform
  - Poles and Zeros
  - The System Function of a LTI System
- Inversion of the z–Transform
  - Decomposition of Rational z – Transform
- The One-sized z–Transform ($Z^+$)
  - Definiton and Properties
  - Solution of Difference Equations
- Analysis of LTI Systems in the z–Domain


| Sequence | Transform | ROC |
|---|---|---|
| $\delta[n]$ | $1$ | All $z$ |
| $u[n]$ | $\frac{1}{1-z^{-1}}$ | $\lvert z\rvert > 1$ |
| $-u[-n-1]$ | $\frac{1}{1-z^{-1}}$ | $\lvert z\rvert < 1$ |
| $\delta[n-m]$ | $z^{-m}$ | All $z$ except 0 or $\infty$ |
| $a^n u[n]$ | $\frac{1}{1-az^{-1}}$ | $\lvert z\rvert > \lvert a\rvert$ |
| $-a^n u[-n-1]$ | $\frac{1}{1-az^{-1}}$ | $\lvert z\rvert < \lvert a\rvert$ |
| $na^n u[n]$ | $\frac{az^{-1}}{(1-az^{-1})^2}$ | $\lvert z\rvert > \lvert a\rvert$ |
| $-na^n u[-n-1]$ | $\frac{az^{-1}}{(1-az^{-1})^2}$ | $\lvert z\rvert < \lvert a\rvert$ |
| $\begin{cases} a^n & 0 \le n \le N-1, \\ 0 & \text{otherwise} \end{cases}$ | $\frac{1-a^N z^{-N}}{1-az^{-1}}$ | $\lvert z\rvert > 0$ |
| $\cos(\omega_0 n)u[n]$ | $\frac{1-\cos(\omega_0)z^{-1}}{1-2\cos(\omega_0)z^{-1}+z^{-2}}$ | $\lvert z\rvert > 1$ |
| $r^n \cos(\omega_0 n)u[n]$ | $\frac{1-r\cos(\omega_0)z^{-1}}{1-2r\cos(\omega_0)z^{-1}+r^2 z^{-2}}$ | $\lvert z\rvert > r$ |

# The z–Transform

- The z–transform of a discrete-time signal x(n) is defined as the power series

$$\mathbf{X(z) = \sum_{n=-\infty}^{+\infty} x(n) z^{-n}}$$

  - where z is a complex variable ($z = a + jb$ or $z = re^{j\delta}$)
  - For convenience, the z-transform of a signal x(n) is denoted by $\mathbf{X(z) = Z\{x(n)\}}$
  - The relationship between x(n) and X(z) is indicated by $\mathbf{x(n) \xleftrightarrow{z} X(z)}$
  - The region of convergence (ROC) of X(z)
    - Set of all values of z for which X(z) attains a finite value.
    - ROC: $\{z \mid |X(z)| < \infty\}$

# The z-Transform: Example

- Determine the z-transform of the following signals
  - $\mathbf{x_1(n) = \{1^{\uparrow} \quad 2 \quad 5 \quad 7 \quad 0 \quad 1\}}$
  - $\mathbf{x_2(n) = \{1 \quad 2 \quad 5^{\uparrow} \quad 7 \quad 0 \quad 1\}}$
  - $\mathbf{x_3(n) = \{0^{\uparrow} \quad 0 \quad 1 \quad 2 \quad 5 \quad 7 \quad 0 \quad 1\}}$
  - $\mathbf{x_4(n) = \{2 \quad 4 \quad 5^{\uparrow} \quad 7 \quad 0 \quad 1\}}$
  - $\mathbf{x_5(n) = \delta(n)}$
  - $\mathbf{x_6(n) = \delta(n-k) \quad k > 0}$
  - $\mathbf{x_7(n) = \delta(n+k) \quad k > 0}$

# The z-Transform: Example

- Determine the z-transform of the following signal
  - $x(n) = a^n u(n)$
  - $x(n) = -a^n u(-n-1)$

# The z-Transform: Example

- The z-transform of $\mathbf{x(n) = a^n u(n)}$

$$\mathbf{X(z) = \sum_{n=-\infty}^{+\infty} x(n) z^{-n} = \sum_{n=-\infty}^{+\infty} a^n u(n) z^{-n} = \sum_{n=0}^{+\infty} a^n z^{-n} = \sum_{n=0}^{+\infty} (a z^{-1})^n}$$

$$\Rightarrow \mathbf{X(z) = \frac{1}{1 - a z^{-1}}} \qquad \text{if } |a z^{-1}| < 1 \text{ (i.e. } |z| > |a|) \equiv \text{ ROC}$$

- The z-transform of $\mathbf{x(n) = -a^n u(-n-1)}$

$$\mathbf{X(z) = \sum_{n=-\infty}^{+\infty} x(n) z^{-n} = \sum_{n=-\infty}^{+\infty} -a^n u(-n-1) z^{-n} = -\sum_{n=-\infty}^{-1} a^n z^{-n} = -\sum_{m=1}^{+\infty} \left(a^{-1} z\right)^m} \qquad (\mathbf{m = -n})$$

$$\Rightarrow \mathbf{X(z) = -\frac{a^{-1} z}{1 - a^{-1} z} = \frac{1}{1 - a z^{-1}}} \qquad \text{if } |a^{-1} z| < 1 \text{ (i.e. } |z| < |a|) \equiv \text{ ROC}$$

# Properties of the z-Transform

- Linearity
  - If

$$x_1(n) \xleftrightarrow{z} X_1(z) \qquad ROC_{X_1(z)}$$

$$x_2(n) \xleftrightarrow{z} X_2(z) \qquad ROC_{X_2(z)}$$

  - Then

$$\mathbf{x(n) = ax_1(n) + bx_2(n) \xleftrightarrow{z} X(z) = aX_1(z) + bX_2(z)}$$

$$ROC_{X(z)} = ROC_{X_1(z)} \cap ROC_{X_2(z)}$$

- Example:
  - Determine the z-transform and the ROC of the following signal

$$x(n) = a^n u(n) + b^n u(-n-1)$$

# Example

$$x(n) = a^n u(n) + b^n u(-n-1)$$

- We have

$$x_1(n) = a^n u(n) \xleftrightarrow{z} X_1(z) = \frac{1}{1 - az^{-1}} \quad \text{ROC: } |z| > |a|$$

$$x_2(n) = -b^n u(-n-1) \xleftrightarrow{z} X_2(z) = \frac{1}{1 - bz^{-1}} \quad \text{ROC: } |z| < |b|$$

- Then,

$$x(n) = x_1(n) - x_2(n) \xleftrightarrow{z} X(z) = X_1(z) - X_2(z) = \frac{1}{1 - az^{-1}} - \frac{1}{1 - bz^{-1}}$$

$$\text{ROC: } |a| < |z| < |b|$$

# Properties of the z-Transform

- Time Shifting
  - If

$$x(n) \xleftrightarrow{z} X(z) \qquad ROC_{X(z)}$$

  - Then

$$x(n-k) \xleftrightarrow{z} z^{-k}X(z) \qquad ROC = ROC_{X(z)} - \begin{cases} 0 & k > 0 \\ \infty & k < 0 \end{cases}$$

- Example
  - Determine the z-transform and the ROC of the following signal $x(n) = \left(\frac{1}{2}\right)^{n-2} u(n-2)$

# Example

- Determine the Z-transform of the following discrete-time signal

$$x(n) = \left(\frac{1}{2}\right)^{n-2} u(n - 2)$$

# Properties of the z-Transform

- Scaling in the z-domain
  - If

$$x(n) \xleftrightarrow{z} X(z) \qquad \text{ROC: } r_1 < |z| < r_2$$

  - Then

$$a^n x(n) \xleftrightarrow{z} X(a^{-1}z) \qquad \text{ROC: } |a|r_1 < |z| < |a|r_2$$

  - where a can be real or complex value

- Example
  - Determine the z-transform of the signals

$$x(n) = a^n \left(\frac{1}{2}\right)^n u(n)$$

# Example

- Determine the Z-transform of the following discrete-time signal

$$x(n) = a^n \left(\frac{1}{2}\right)^n u(n)$$

# Properties of the z-Transform

- Time reversal
  - If

$$x(n) \xleftrightarrow{z} X(z) \qquad \text{ROC: } r_1 < |z| < r_2$$

  - Then

$$x(-n) \xleftrightarrow{z} X(z^{-1}) \qquad \text{ROC: } \frac{1}{r_2} < |z| < \frac{1}{r_1}$$

- Example
  - Determine the z-transform of the signals $x(n) = (2)^n u(-n)$

# Example

- Determine the Z-transform of the following discrete-time signal

$$x(n) = (2)^n u(-n)$$

# Properties of the z-Transform

- Differentiation in the z-domain
  - If

$$x(n) \xleftrightarrow{z} X(z) \qquad \text{ROC: } r_1 < |z| < r_2$$

  - Then

$$nx(n) \xleftrightarrow{z} -z\frac{dX(z)}{dz} \qquad \text{ROC: } r_1 < |z| < r_2$$

- Example
  - Determine the z-transform of the signals $x(n) = na^n u(n)$

# Example

- Determine the Z-transform of the following discrete-time signal

$$x(n) = na^n u(n)$$

# Properties of the z-Transform

- Convolution of two sequences
  - If

$$x_1(n) \xleftrightarrow{z} X_1(z) \qquad ROC_{X_1(z)}$$

$$x_2(n) \xleftrightarrow{z} X_2(z) \qquad ROC_{X_2(z)}$$

  - Then

$$x(n) = x_1(n) * x_2(n) \xleftrightarrow{z} X(z) = X_1(z)X_2(z)$$

$$ROC_{X(z)} = ROC_{X_1(z)} \cap ROC_{X_2(z)}$$

# Properties of the z-Transform

- The convolution property is one of the most powerful properties of the z-transform because it **converts the convolution of two signals** (in time domain) **to multiplication of their transforms**.

- Computation of the convolution of two signals, using z-transform, requires the following steps:
  - Compute the z-transform of the signals to be convolved
    - $X_1(z) = Z\{x_1(n)\}$
    - $X_2(z) = Z\{x_2(n)\}$
  - Multiply the two z-transform
    - $X(z) = X_1(z)X_2(z)$
  - Find the inverse z-transform of X(z)
    - $x(n) = Z^{-1}\{X(z)\}$

**Time domain → Z domain**

**Z domain**

**Z domain → Time domain**

# Example

- Compute the convolution x(n) of two signals

$$x_1(n) = \{1 \quad -2 \uparrow \quad 1\}$$

$$X_1(z) = z - 2 + z^{-1}$$

$$x_2(n) = \begin{cases} 1, & 0 \le n \le 5 \\ 0, & \text{elsewhere} \end{cases}$$

$$X_2(z) = 1 + z^{-1} + z^{-2} + z^{-3} + z^{-4} + z^{-5}$$

$$X(z) = X_1(z)X_2(z) = (z - 2 + z^{-1})(1 + z^{-1} + z^{-2} + z^{-3} + z^{-4} + z^{-5})$$

$$X(z) = z - 1 - z^{-5} + z^{-6}$$

$$\mathbf{x(n) = x_1(n) * x_2(n) = Z^{-1}\{X(z)\} = \{1 \quad -1^{\uparrow} \quad 0 \quad 0 \quad 0 \quad 0 \quad -1 \quad 1\}}$$

# In-Class Hackathon

- Determine the z-transform of the following signals

- $x_1(n) = \{3 \quad 0 \quad 0 \quad 0 \quad 0 \quad 6^{\uparrow} \quad 1 \quad -4\}$

- $x_2(n) = \begin{cases} \left(\frac{1}{3}\right)^n & n \geq 0 \\ \left(\frac{1}{2}\right)^{-n} & n < 0 \end{cases}$

- $x_3(n) = (1+n)u(n)$

- $x_4(n) = (a^n + a^{-n})u(n)$ **a: real**

- $x_5(n) = (-1)^n 2^{-n} u(n)$

- $x_6(n) = \frac{1}{2}(n^2 + n)\left(\frac{1}{3}\right)^{n-1} u(n-1)$

- $x_7(n) = \left(\frac{1}{2}\right)^n [u(n) - u(n-10)]$

- $x_8(n) = n^2 u(n)$

# Rational z–Transform

- **The zeros** of X(z) are the values of z for which X(z)=0.
- **The poles** of X(z) are the values of z for which X(z)=∞.
  - ROC does not contain any poles.

- **Example**
  - Determine the pole-zero plot for the signal

$$X(z) = \frac{1}{1 - 0.9z^{-1}}$$

$$X(z) = \frac{1 - z^{-1}}{1 - z^{-1} - 2z^{-2}}$$

# Analysis of LTI Sytems in z Domain

- In order to determine y(n)
  - Determine X(z) and H(z)
  - Compute Y(z) = X(z)H(z)
  - Determine Inverse z-Transform of Y(Z)

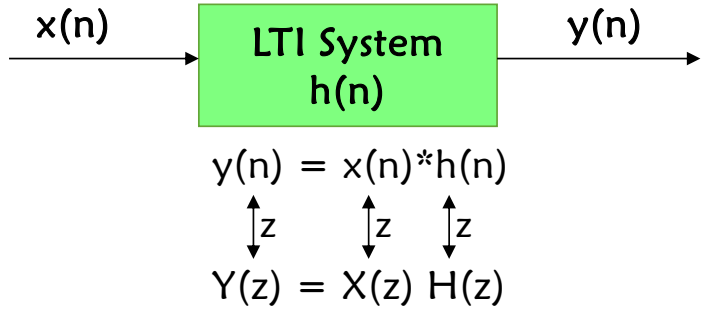


- Impulse response

$$\mathbf{H(z) = \frac{Y(z)}{X(z)} = \sum_{n=-\infty}^{+\infty} h(n)z^{-n}}$$

  - H(z): system function in z domain
  - h(n): system function in time domain

- Example: $\mathbf{h(n) = \left(\frac{1}{2}\right)^n u(n)}$ and $\mathbf{x(n) = \left(\frac{1}{3}\right)^n u(n)}$

$$\mathbf{H(z) = \frac{1}{1 - \frac{1}{2}z^{-1}}} \qquad \mathbf{X(z) = \frac{1}{1 - \frac{1}{3}z^{-1}}}$$

$$\mathbf{Y(z) = X(z)H(z) = \frac{1}{\left(1 - \frac{1}{3}z^{-1}\right)} \cdot \frac{1}{\left(1 - \frac{1}{2}z^{-1}\right)}}$$

# Inversion of the z-Transform

- The inverse z-transform is formally given by

$$\mathbf{x(n) = \frac{1}{2\pi j}\oint_C X(z)z^{n-1}dz}$$

  - where C can be taken as a circle in the ROC of X(z) in the z-plane
- Notation: $x(n) = Z^{-1}\{X(z)\}$

- There are three methods that are often used for evaluation of the z-transform in practice.
  - Direct evaluation by contour integration.
  - Expansion into a series of terms, in the variables z and $z^{-1}$
  - Partial-fraction expansion and table lookup

# Inverse z - Transform

- Partial-fraction expansion and table lookup
  - **Principle**
    - If X(z) is represented as $X(z) = a_1X_1(z) + a_2X_2(z) + \ldots + a_kX_k(z)$
    - Then $x(n) = a_1x_1(n) + a_2x_2(n) + \ldots + a_kx_k(n)$
  - **Rational z-transform**
    - X(z) is proper if $a_N \neq 0$ and $M<N$
    - if $M \geq N$
      - It can always be written as

$$X(z) = \frac{N(z)}{D(z)} = \frac{b_0 + b_1 z^{-1} + \cdots + b_M z^{-M}}{1 + a_1 z^{-1} + \cdots + a_N z^{-N}}$$

$$X(z) = \frac{N(z)}{D(z)} = c_0 + c_1 z^{-1} + \cdots + c_{M-N} z^{-(M-N)} + \frac{N_1(z)}{D(z)}$$

  - **Approach**
    - Partial-fraction expansion
    - Table lookup for inverse z-transform

$$X(z) = \frac{N(z)}{D(z)} = \frac{b_0 + b_1 z^{-1} + \cdots + b_M z^{-M}}{1 + a_1 z^{-1} + \cdots + a_N z^{-N}}$$

$$= \frac{b_0 z^N + b_1 z^{N-1} + \cdots + b_M z^{N-M}}{z^N + a_1 z^{N-1} + \cdots + a_N}$$

$$\frac{X(z)}{z} = \frac{b_0 z^{N-1} + b_1 z^{N-2} + \cdots + b_M z^{N-M-1}}{z^N + a_1 z^{N-1} + \cdots + a_N}$$

# Inverse z - Transform

- Partial-fraction expansion
  - Determine poles ($p_1, p_2, \ldots, p_N$) by solving the equation: $z^N + a_1 z^{N-1} + \ldots + a_N = 0$
  - If these poles are all different (distinct) $\dfrac{\mathbf{X(z)}}{\mathbf{z}} = \dfrac{\mathbf{A_1}}{\mathbf{z - p_1}} + \dfrac{\mathbf{A_2}}{\mathbf{z - p_2}} + \cdots + \dfrac{\mathbf{A_N}}{\mathbf{z - p_N}}$
    - Determine $A_k$ by $\mathbf{A_k} = \left.\dfrac{\mathbf{(z - p_k)X(z)}}{\mathbf{z}}\right|_{\mathbf{z = p_k}}$
    - If $p_2 = p_1^*$ (complex conjugates) then $A_2 = A_1^*$
  - Multi-order poles
    - If pole $p_k$ is a pole of multiplicity L $\dfrac{X(z)}{z} = \dfrac{A_1}{z - p_1} + \dfrac{A_2}{z - p_2} + \cdots \dfrac{A_{1k}}{z - p_k} + \dfrac{A_{2k}}{(z - p_k)^2} + \cdots + \dfrac{A_{lk}}{(z - p_k)^l} + \cdots + \dfrac{A_N}{z - p_N}$
    - Determine $A_{ik}$ by $A_{ik} = \dfrac{1}{(l-i)!}\dfrac{d^{l-i}}{dz}\left[\dfrac{(z - p_k)^l X(z)}{z}\right]_{z=p_k} \quad i = 1,2,\ldots,l$

# Inverse z - Transform

- Table lookup to detemine inverse z-transform for each partial fraction
  - If the poles are all different $X(z) = A_1 \frac{1}{1 - p_1 z^{-1}} + A_2 \frac{1}{1 - p_2 z^{1}} + \cdots + A_N \frac{1}{z - p_N z^{-1}}$

We have

$$Z^{-1}\left\{\frac{1}{1 - p_k z^{-1}}\right\} = \begin{cases} p_k^n u(n) & \text{ROC: } |z| > |p_k| \ \ (\text{causal}) \\ -p_k^n u(-n-1) & \text{ROC: } |z| < |p_k| \ \ (\text{non-causal}) \end{cases}$$

Then

$$x(n) = (A_1 p_1^n + A_2 p_2^n + \cdots + A_N p_N^n) u(n)$$

  - In case of complex-conjugate poles

If $\begin{cases} A_k = |A_k| e^{j\alpha_k} \\ p_k = r_k e^{j\beta_k} \end{cases}$ then $x_k(n) = \left[A_k (p_k)^n + A_k^* (p_k^*)^n\right] u(n)$

$$Z^{-1}\left\{A_k \frac{1}{1 - p_k z^{-1}} + A_k^* \frac{1}{1 - p_k^* z^{-1}}\right\} = 2|A_k| r_k^n \cos(\beta_k n + a_k) u(n) \quad \text{ROC: } |z| > |p_k| = r_k$$

  - In case of double poles

$$Z^{-1}\left\{\frac{p z^{-1}}{(1 - p z^{-1})^2}\right\} = n p^n u(n) \quad \text{ROC: } |z| > |p|$$

# Exercise

# Inverse Z-Transform

$$X(z) = \frac{1}{(1 + z^{-1})\,(1 - z^{-1})^2}$$

# Inverse Z-Transform

Determine the causal signal x(n) if its z-transform is given

$$X(z) = \frac{1 - 3z^{-1}}{1 + 3z^{-1} + 2z^{-2}}$$

# Inverse Z-Transform

$$X(z) = \frac{1 + z^{-1}}{1 - z^{-1} + 0.5z^{-2}}$$

# Inverse Z-Transform

$$X(z) = \frac{1 + z^{-1}}{1 - z^{-1} + 0.5z^{-2}}$$

$$p_1 = \frac{1}{2} + j\frac{1}{2}$$
$$p_2 = \frac{1}{2} - j\frac{1}{2}$$

$$\frac{X(z)}{z} = \frac{A_1}{z - p_1} + \frac{A_2}{z - p_2} \Longrightarrow X(z) = \frac{A_1}{1 - p_1 z^{-1}} + \frac{A_2}{1 - p_2 z^{-1}}$$

$$A_1 = \frac{1}{2} - j\frac{3}{2}$$
$$A_2 = \frac{1}{2} + j\frac{3}{2}$$

# Inverse Z-Transform

$$X(z) = \frac{1}{(1 + z^{-1})\,(1 - z^{-1})^2}$$

# Inverse Z-Transform

$$X(z) = \frac{1}{(1+z^{-1})\,(1-z^{-1})^2}$$

$$p_1 = -1$$
$$p_2 = p_3 = 1$$

$$\frac{X(z)}{z} = \frac{A_1}{z+1} + \frac{A_2}{z-1} + \frac{A_3}{(z-1)^2} \Longrightarrow X(z) = \frac{A_1}{1+z^{-1}} + \frac{A_2}{1-z^{-1}} + \frac{A_3 z^{-1}}{(1-z^{-1})^2}$$

$$A_1 = \frac{1}{4} \qquad A_2 = \frac{3}{4} \qquad A_3 = \frac{1}{2}$$

# One-sided z-Transform

- The one-sided or unilateral z-transform of a signal x(n) is defined by

$$X^{+}(z) = \sum_{n=0}^{+\infty} x(n) z^{-n}$$

- We aslo use the notation $Z^{+}\{x(n)\}$ and

$$x(n) \xleftrightarrow{z^{+}} X^{+}(z)$$

- Charateristics
  - $Z^{+}\{x(n)\}$ does not contain information about the signal x(n) for negative value of time (i.e. $n < 0$).
  - $Z^{+}\{x(n)\}$ is **unique** only for causal signals because only these signals are zero for $n < 0$.
  - $Z^{+}\{x(n)\} = Z\{x(n)u(n)\}$
    - It is not necessary to refer to their ROC when we deal with one-sided z-transforms.

# One-sided z-Transform

- Properties
  - The properties of the z-transform are correct for the one-sided z-trasnform **except the time shifting property.**
  - **Time shifting in one-sided z-Transform**
    - if

$$x(n) \xleftrightarrow{z^+} X^+(z)$$

    - **Delay**

$$x(n-k) \xleftrightarrow{z^+} z^{-k}\left[X^+(z) + \sum_{n=1}^{k} x(-n)z^n\right] \quad \text{where } k > 0$$

      - If x(n) is causal signal, we have x(n)

$$x(n-k) \xleftrightarrow{z^+} z^{-k}X^+(z) \quad \text{where } k > 0$$

    - **Advance**

$$x(n+k) \xleftrightarrow{z^+} z^{k}\left[X^+(z) - \sum_{n=0}^{k-1} x(n)z^{-n}\right] \quad \text{where } k > 0$$

# One-sided z-Transform

- Solution of difference equation
  - Use one-sided z-transform to solve the difference equation with non-zero initial condition.
  - Procedure
    - **Determine difference equation described the system.**
    - **Adopt the one-sided z-transform on both sides of the difference equation.**
    - **Solve the equation in z-domain**
    - **Adopt inverse z-transform to convert the response in z domain to time domain.**
- **Example**: determine the unit step response [x(n)=u(n)] of the following system
- $y(n) = ay(n-1) + x(n)$ ($|a| < 1$) with the initial condition $y(-1) = 1$

$$\mathbf{X^+(z) = \frac{1}{1 - z^{-1}}}$$

$$\mathbf{Y^+(z) = a\left[z^{-1}Y^+(z) + y(-1)\right] + X^+(z) \Rightarrow \left(1 - az^{-1}\right)Y^+(z) = ay(-1) + X^+(z)}$$

$$\Rightarrow Y^+(z) = \frac{ay(-1)}{1 - az^{-1}} + \frac{1}{1 - az^{-1}}X^+(z) = \frac{a}{1 - az^{-1}} + \frac{1}{1 - az^{-1}}\frac{1}{1 - z^{-1}}$$

$$\Rightarrow \mathbf{y(n) = a^{n+1}u(n) + \frac{1 - a^{n+1}}{1 - a}u(n)}$$

# One-sided z-Transform

- Determine the response of a LTI System for an input signal x(n) and given system function h(n).

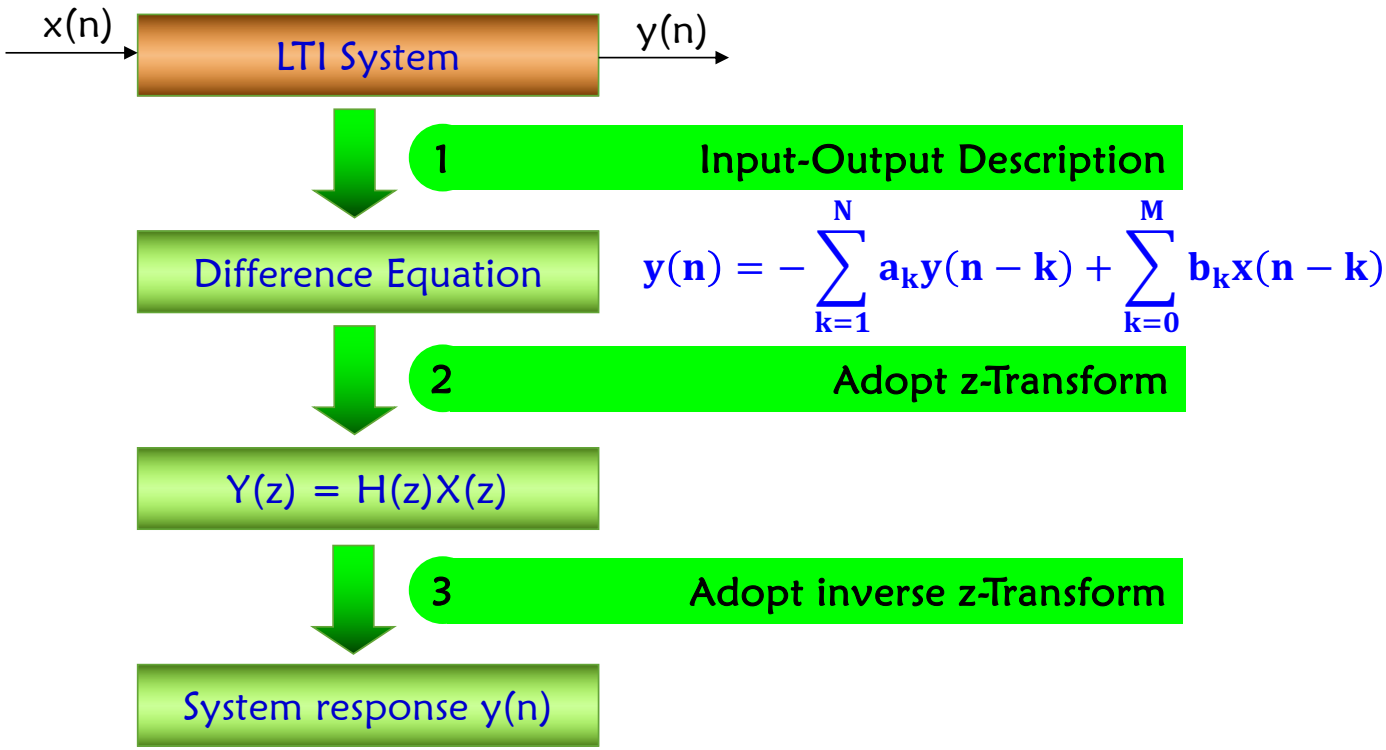

# Analysis of LTI Systems

- Response of pole-zero systems
  - Assume that

$$\mathbf{H(z) = \frac{B(z)}{A(z)} \quad and \quad X(z) = \frac{N(z)}{Q(z)}}$$

  - If the system is relax (i.e. y(-1) = y(-2) = … = y(-N) = 0)

$$\mathbf{Y(z) = H(z)X(z) = \frac{B(z)N(z)}{A(z)Q(z)}}$$

  - Assume that
    - The system has N single poles $p_1, p_2, \ldots, p_N$ and X(z) has also L single poles $q_1, q_2, \ldots, q_L$
    - $p_k \neq q_m$ (k = 1, …, N và m = 1, …, L)
    - It can not adopt reduction for B(z)N(z) and A(z)Q(z)

$$\mathbf{Y(z) = \sum_{k=1}^{N} \frac{A_k}{1 - p_k z^{-1}} + \sum_{k=1}^{L} \frac{Q_k}{1 - q_k z^{-1}}}$$

  - Apply inverse z-transform

$$\mathbf{y(n) = \sum_{k=1}^{N} A_k p_k^n u(n) + \sum_{k=1}^{L} Q_k q_k^n u(n)}$$

The natural response

The forced response

- It can be generalized for the case X(z) and H(z) has same pole or multiple poles.

# Analysis of LTI Systems

- Determine the response of the input signal x(n) thru a LTI system with initial conditions for a given h(n) and non-zero initial conditions of the system.

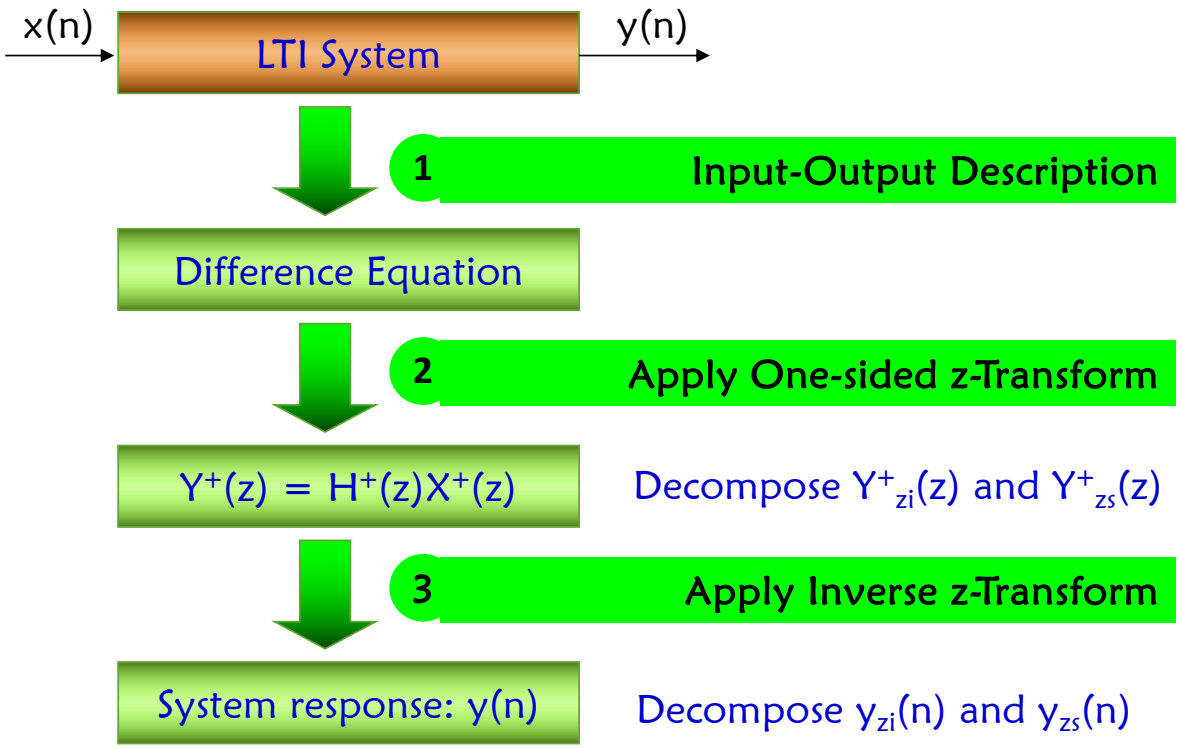

# Analysis of LTI Systems

- Response of pole-zero system with non-zero initial condition
  - Given a causal signal x(n) and initial conditions y(-1), y(-2), …, y(-N) $y(n) = -\sum_{k=1}^{N} a_k y(n-k) + \sum_{k=0}^{M} b_k x(n-k)$
  - Adopt one-sided z-transform and $X^+(z) = X(z)$

$$Y^+(z) = \frac{\sum_{k=0}^{M} b^k z^{-k}}{1+\sum_{k=1}^{N} a^k z^{-k}} X(z) - \frac{\sum_{k=1}^{N} a^k z^{-k} \sum_{n=1}^{k} y(-n) z^n}{1+\sum_{k=1}^{N} a^k z^{-k}} = H(z)X(z) + \frac{N_0(z)}{A(z)}$$

$$N_0(z) = -\sum_{k=1}^{N} a^k z^{-k} \sum_{n=1}^{k} y(-n) z^n$$

  - The total response consits of two parts
    - The zero state response $Y_{zs}(z) = H(z)X(z)$
    - The zero input response ($p_1, p_2, \ldots, p_N$ are poles of A(z))
    - Since $y(n) = y_{zs}(n) + y_{zi}(n)$

$$Y_{zi}(z) = \frac{N_o(z)}{A(z)} \xleftrightarrow{z^+} y_{zi}(n) = \sum_{k=1}^{N} D_k p_k^n u(n)$$

$$\Rightarrow y(n) = \sum_{k=1}^{N} A_k^{'} (p_k)^n u(n) + \sum_{k=1}^{L} Q_k (q_k)^n u(n) \qquad (A_k^{'} = A_k + D_k)$$

# Exercise (1)

- Determine **all possible signals** that can have the following z-transform

$$X(z) = \frac{1}{1 - 1.5z^{-1} + 0.5z^{-2}}$$

# Exercise (2)

- Determine $x(n) = x_1(n) * x_2(n)$ where

$$x_1(n) = \left(\frac{1}{4}\right)^n u(n-1)$$

$$x_2(n) = \left[1 + \left(\frac{1}{2}\right)^n\right] u(n)$$

# Exercise (3)

- A LTI system is given by input-output description

$$y(n) = \frac{1}{2}y(n-1) + 4x(n) + 3x(n-1)$$

  - Determine **impulse response h(n)** of the above system using Z and $Z^{-1}$ Transform
  - Determine $y_{zs}(n)$ of the following LTI system where $x(n) = \left(\frac{1}{2}\right)^n u(n)$ using one-sided Z Transform and $Z^{-1}$ Transform

# Exercise (4)

- If

$$\mathbf{x(n)} \xleftrightarrow{\mathbf{z}} \mathbf{X(z)}$$

- Then, prove the followings
  - $Z\{x^*(n)\} = X^*(z^*)$
  - $Z\{Re[x(n)]\} = \frac{1}{2}[X(z) + X^*(z^*)]$
  - $Z\{Im[x(n)]\} = \frac{1}{2}[X(z) - X^*(z^*)]$
  - $Z\{e^{j\omega_0 n}\} = X(ze^{-j\omega_0})$

| Sequence | Transform | ROC |
|---|---|---|
| $\delta[n]$ | $1$ | All $z$ |
| $u[n]$ | $\frac{1}{1-z^{-1}}$ | $\lvert z\rvert > 1$ |
| $-u[-n-1]$ | $\frac{1}{1-z^{-1}}$ | $\lvert z\rvert < 1$ |
| $\delta[n-m]$ | $z^{-m}$ | All $z$ except 0 or $\infty$ |
| $a^n u[n]$ | $\frac{1}{1-az^{-1}}$ | $\lvert z\rvert > \lvert a\rvert$ |
| $-a^n u[-n-1]$ | $\frac{1}{1-az^{-1}}$ | $\lvert z\rvert < \lvert a\rvert$ |
| $na^n u[n]$ | $\frac{az^{-1}}{(1-az^{-1})^2}$ | $\lvert z\rvert > \lvert a\rvert$ |
| $-na^n u[-n-1]$ | $\frac{az^{-1}}{(1-az^{-1})^2}$ | $\lvert z\rvert < \lvert a\rvert$ |
| $\begin{cases} a^n & 0 \le n \le N-1, \\ 0 & \text{otherwise} \end{cases}$ | $\frac{1-a^N z^{-N}}{1-az^{-1}}$ | $\lvert z\rvert > 0$ |
| $\cos(\omega_0 n)u[n]$ | $\frac{1-\cos(\omega_0)z^{-1}}{1-2\cos(\omega_0)z^{-1}+z^{-2}}$ | $\lvert z\rvert > 1$ |
| $r^n \cos(\omega_0 n)u[n]$ | $\frac{1-r\cos(\omega_0)z^{-1}}{1-2r\cos(\omega_0)z^{-1}+r^2 z^{-2}}$ | $\lvert z\rvert > r$ |

# In-Class Quiz

- Use z-transform, one-sided z-transform and inverse z-transform to determine the zero-input response $y_{zi}(n)$, the zero-sate response $y_{zs}(n)$, and total response $y(n)$ of the following systems.

$$y(n) = \frac{3}{4}y(n-1) + \frac{1}{4}y(n-2) + x(n) + x(n-1)$$

where $x(n) = u(n)$ and $y(-1) = y(-2) = 1$.

# In-Class Quiz

- Use z-transform, one-sided z-transform and inverse z-transform to determine the zero-input response $y_{zi}(n)$, the zero-sate response $y_{zs}(n)$, and total response $y(n)$ of the following systems.

$$y(n) = \frac{3}{4}y(n-1) + \frac{1}{4}y(n-2) + x(n) + x(n-1)$$

where $x(n) = u(n)$ and $y(-1) = y(-2) = 1$.

$$y(n) = \frac{1}{4}y(n-2) + x(n-2)$$

where $x(n) = \left(\frac{1}{3}\right)^n u(n)$ and $y(-1) = y(-2) = 1$.

$$y(n) = y(n-1) - \frac{1}{4}y(n-2) + x(n-2)$$

where $x(n) = \left(\frac{2}{3}\right)^n u(n)$ and $y(-1) = y(-2) = 1$.